FEATURES

- 100% full load burn-in test
- Universal AC input
- Small size and high efficiency
- Constant current constant voltage design, stable output
- 2 Years warranty
- Protection: short circuit/over Voltage/over/load temperature

MODEL		**24V 300W**	**12V 300W**
OUTPUT	DC VOLTAGE	24V	12V
	RATED CURRENT	12.5A	25A
	CURRENT RANGE	0~12.5A	0~25A
	RATED POWER	300W	300W
	RIPPLE& NOISE (MAX.)	≤240mVp-p	≤120mVp-p
	VOLTAGE TOLERANCE	±5%	
	SETUP , RISE TIME	1500ms,50ms at full load	
	HOLD UP TIME(Typ.)	20ms/230VAC at full load	
INPUT	VOLTAGE RANGE	175-240VAC	
	FREQUENCY RANGE	47~63Hz	
	POWER FACTOR(Typ.)	PF>0.6/220VAC	
	EFFICIENCY(Typ.)	94%	92%
	AC CURRENT(Typ.)	2.4A/230V	
	INRUSH CURRENT(Typ.)	COLD START 50A/230VAC	
	SHORT CIRCUIT	protection type: recovers automatically after fault condition is removed	
PROTECTION	OVER LOAD	80-100% hiccup mode , auto-recovery	
	OVER TEMP	≥85°C start protection, recovers automatically	
	OVER CURRENT	Exceeding the maximum current, circuit protection occurs. Once the abnormality is resolved, the circuit returns to normal.	
ENVIRONMENT	WORKING TEMP	-20℃~ +60℃	
	WORKING HUMIDITY	20%~90%RH	
	STORAGE TEMP , HUMIDITY	-40℃~+85℃,10%~90%RH	
SAFETY&EMC	SAFETY STANDARDS	EN62368-1	
	WITHSTAND VOLTAGE	I/P-O/P:1.5KVAC I/P-FG:1.5KVAC O/P-FG:0.5KVAC	
	EMC TESTING STANDARD	EN 55032 CLASS A	
Remark	1. All parameters are the measured values under the conditions of AC220V input voltage, rated load and 25℃; 2. The ripple and noise voltages are the measured values obtained using a 12" twisted-pair cable with 0.1uF and 47uF added at the end of the oscilloscope with a 20MHz bandwidth.		

Mechanical Specification

Dimension: 292.8*34*13mm	Carton size: 315*230*200 mm
Carton Quantity: 200PCS/Carton	Weight: 0.45Kg/PCS

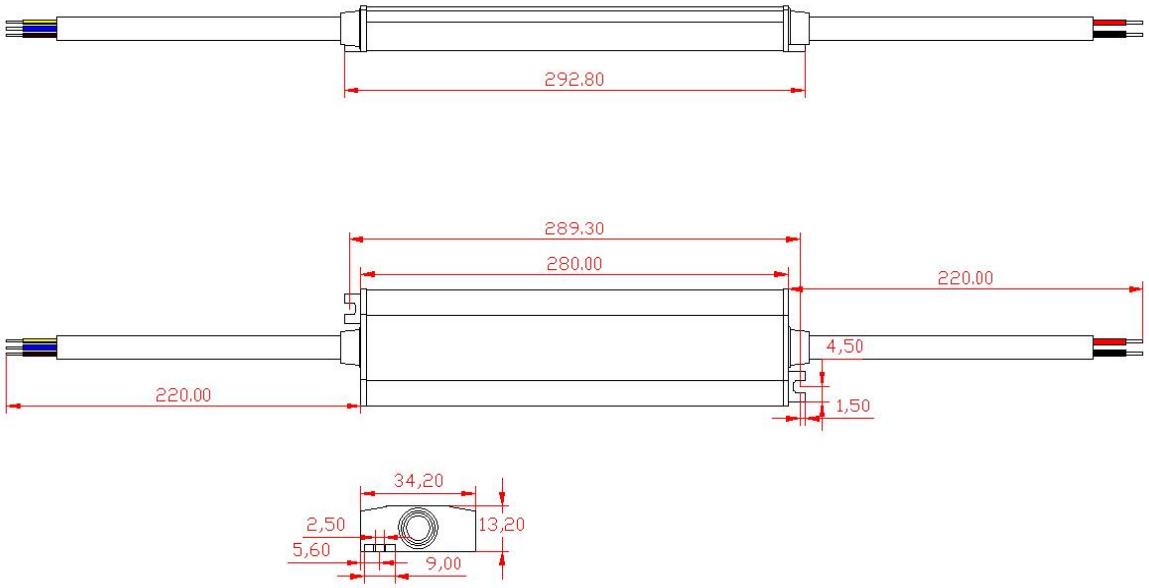

Derating Curve	Static Characteristics(12V)
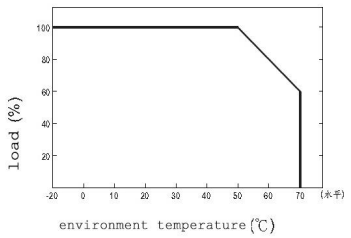	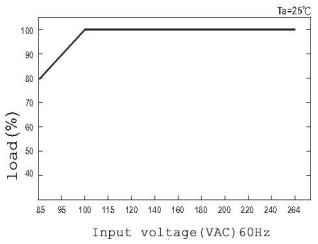

REMARKS:

1, The above mentioned data were measured at 230VAC input and 25°C.
2, Ripple & noise are measured at 20MHz of bandwidth by using a 12" twisted pair-wire terminated with a 0.1uf & 47uf parallel capacitor.
3, Cut the AC input before checking any mal-phenomenons.
4, Make sure the INPUT&OUPUT were in right situation before connected to power supply.
5, Be ware of high power pressure may caused by short circut when installing metal casing products.
6, Please contact us at info@smpspower.com for further solution if any unforeable problem happens.

Tel: 086 755 2306 0905 Fax: 086 755 2304 1269 Website: www.smpspower.com

Add: 5th Floor, B3 Building, Huafeng Shiji Industrial park, Hangcheng Road, Xixiang, Bao'an district, Shenzhen P.R.C.